i-Wheel-A-170-73

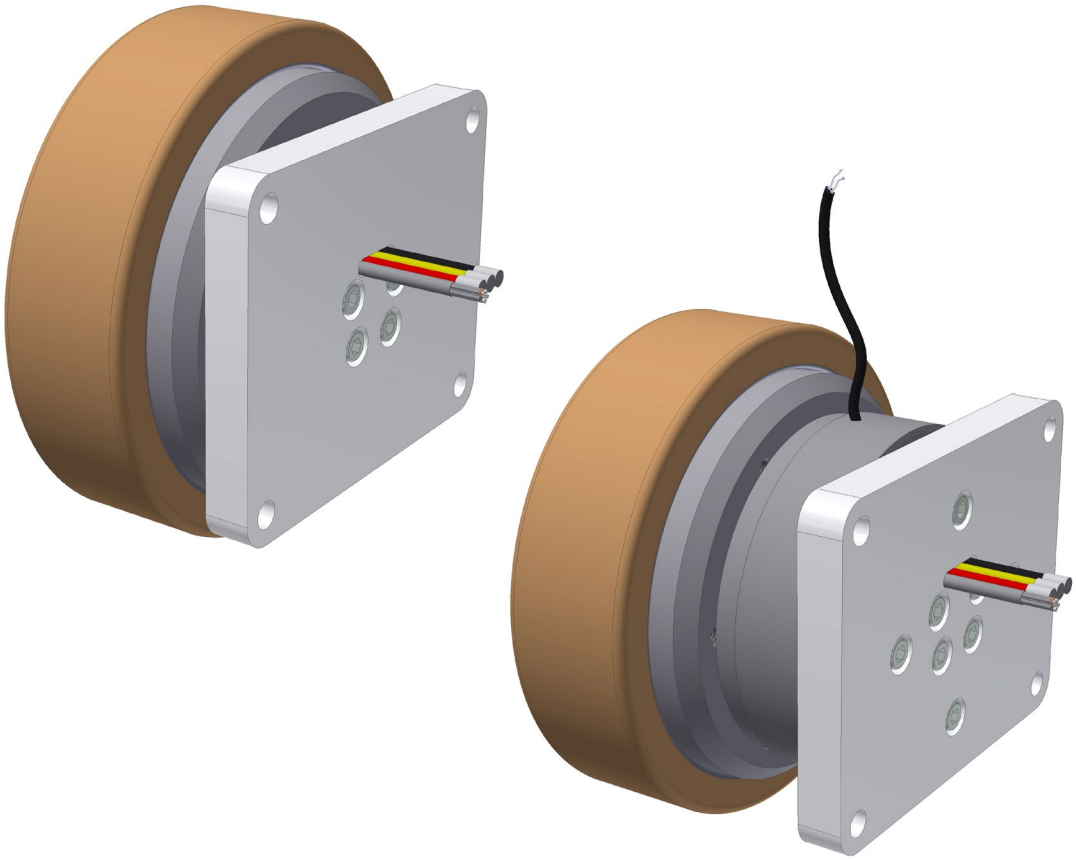

BLDC-Motors

3213

Description

The gearless external rotor motor guarantees smooth running and cuts an impressive figure with its small size. The high-torque external rotor motor is fully integrated into the hub. The Vulkollan coating is suitable for heavy-duty applications.

Special features

The drive has a very small overall depth, allowing users a tremendous amount of creative freedom when designing the layout of vehicles.

Customer specific

The wheel drive is available with or without a brake. The flange plate can be individually adapted to suit your requirements. It is possible to customize the drive.

i-Wheel-A-170-73

3213

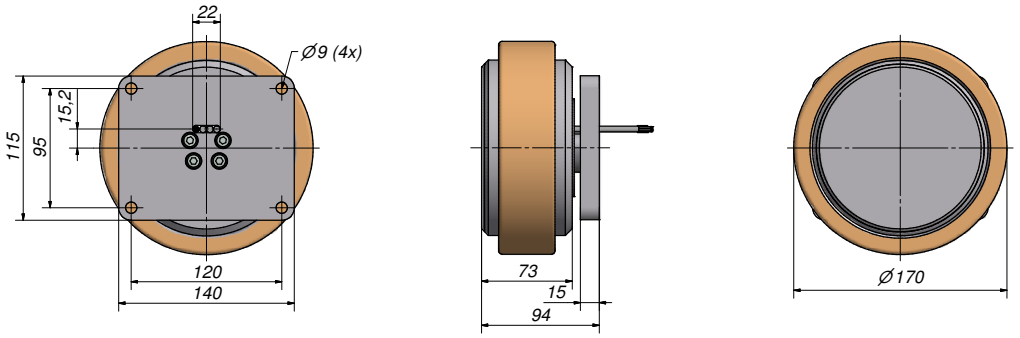

3213 with brake

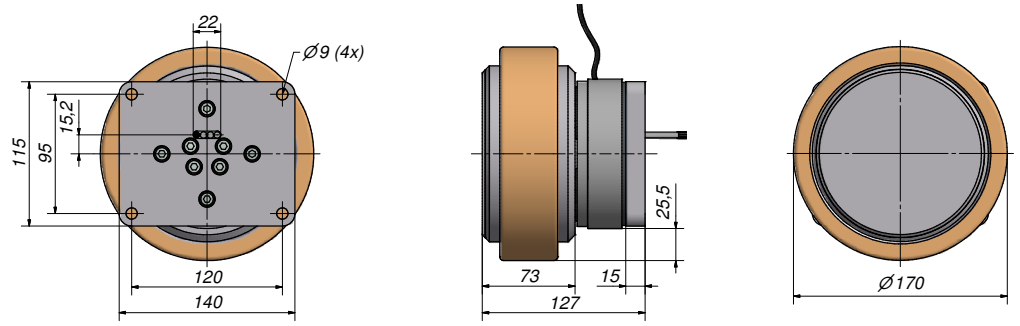

Technical Data

	3213		
Rated voltage	24 V	36 V	48 V
Rated current	22 A	21 A	19 A
Rated torque	10 Nm	10 Nm	10 Nm
Rated speed	350 rpm	550 rpm	750 rpm
Rated power (output)	375 W	550 W	710 W
Max. efficiency	94 %	92 %	92 %
Idle speed	14 Nm	14 Nm	14 Nm
Coating of tyres	Vulkollan 93° Shore A	Vulkollan 93° Shore A	Vulkollan 93° Shore A
Max. radial axle load F_r	2500 N	2500 N	2500 N
Max. axial axle load F_a	800 N	800 N	800 N
Weight	5.7 Kg	5.7 Kg	5.7 Kg
Brake optional			
Braking force	36 N	36 N	36 N
Power supply	24 V / 22 W	24 V / 22 W	24 V / 22 W
Weight	2.5 Kg	2.5 Kg	2.5 Kg